25/35 Versa-Lift Spec Sheet

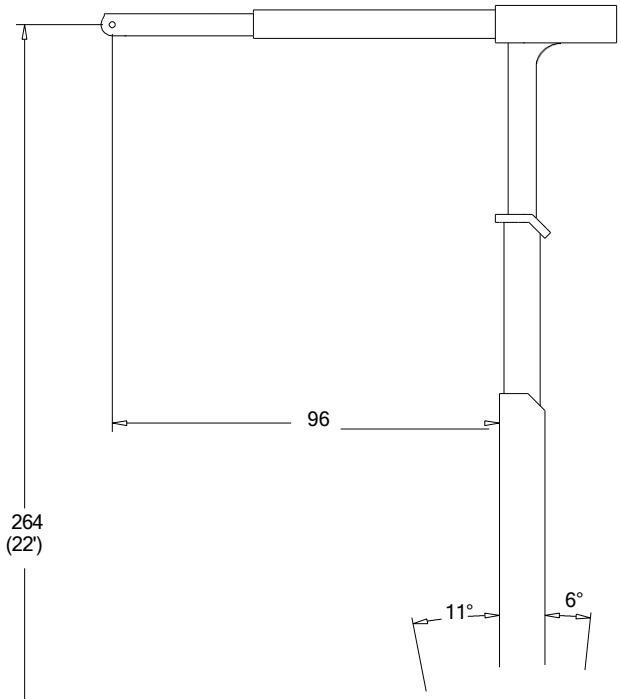

Capacity:	25,000 lbs. Frame Retracted 35,000 lbs. Frame Extended
Engine:	2.5L Kubota Industrial Engine
Transmission:	Two Speed Hydrostatic
Grade:	38% Empty 17% Loaded
Tilt:	11° Forward 6° Back
Weight:	Gross – 34,500 lbs. Counterweights – 6,000 lbs. Boom – 3,000 lbs. Forks – 1,500 lbs.

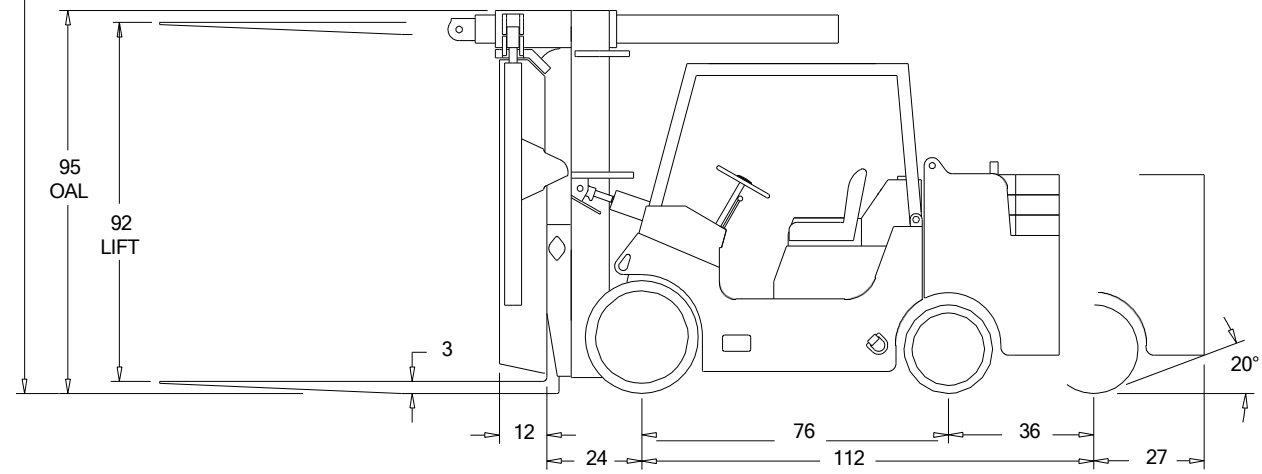

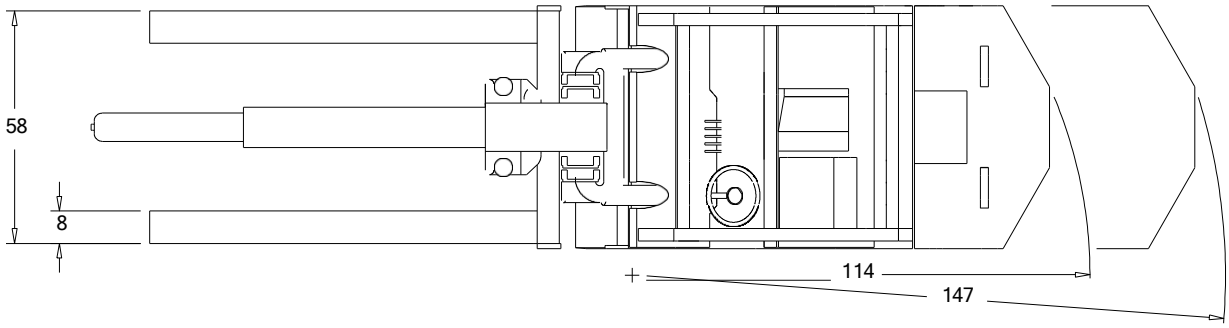

VERSA-LIFT

25/35 Versa-Lift with 3 Counterweight Slabs

Slab Weight (lbs)	*Number of Slabs*	*Standard Wheel Base (in)*
1900	**3**	**76**

Lift Capacities w/Forks Only (lbs)					
		Counterweight Extension (in)			
		0	12	24	36
Load Center From Fork Face (in)	24	24300	28200	32000	35800
	36	19400	22500	25500	28600
	48	16200	18700	21300	23800
	60	13800	16000	18200	20400
	72	12100	14000	15900	17800
	84	10700	12400	14100	15800

Lift Capacities w/Boom Only (lbs)					
		Counterweight Extension (in)			
		0	12	24	36
Load Center From Boom Face (in)	12	23500	27400	31200	35100
	24	18800	21900	24900	28000
	36	15600	18200	20700	23300
	48	13400	15600	17800	19900
	60	11700	13600	15500	17400
	72	10400	12100	13800	15500
	84	9400	10900	12400	13900
	96	8500	9900	11300	12700

Lift Capacities w/Forks & Boom (lbs)					
		Counterweight Extension (in)			
		0	12	24	36
Load Center From Boom Face (in)	24	17800	20900	24000	27000
	36	14800	17400	19900	22500
	48	12700	14900	17100	19300
	60	11100	13000	14900	16800
	72	9900	11600	13300	15000
	84	8900	10400	11900	13500
	96	8100	9500	10800	12200

****All Load Capacities are rated with the mast vertical.*

25/35 Versa-Lift with 3 Counterweight Slabs

Slab Weight (kg)	*Number of Slabs*	*Standard Wheel Base (mm)*
860	**3**	**1900**

Lift Capacities w/Forks Only (kg)					
		Counterweight Extension (mm)			
		0	300	600	900
Load Center From Fork Face (mm)	600	11300	13100	14900	16700
	900	9000	10500	11900	13300
	1200	7500	8700	9900	11100
	1500	6400	7400	8500	9500
	1800	5600	6500	7400	8300
	2100	5000	5800	6600	7400

Lift Capacities w/Boom Only (kg)					
		Counterweight Extension (mm)			
		0	300	600	900
Load Center From Boom Face (mm)	300	11000	12700	14500	16300
	600	8700	10200	11600	13000
	900	7300	8500	9600	10800
	1200	6200	7200	8300	9300
	1500	5400	6300	7200	8100
	1800	4800	5600	6400	7200
	2100	4400	5100	5800	6500
	2400	4000	4600	5200	5900

Lift Capacities w/Forks & Boom (kg)					
		Counterweight Extension (mm)			
		0	300	600	900
Load Center From Boom Face (mm)	600	8300	9700	11200	12600
	900	6900	8100	9300	10500
	1200	5900	6900	7900	9000
	1500	5200	6100	7000	7800
	1800	4600	5400	6200	7000
	2100	4100	4800	5600	6300
	2400	3800	4400	5000	5700

****All Load Capacities are rated with the mast vertical.*

25/35 Versa-Lift with 3 Counterweight Slabs and Sideshifter Carriage

Slab Weight (lbs)	*Number of Slabs*	*Standard Wheel Base (in)*
1900	**3**	**76**

Lift Capacities w/Forks Only (lbs)					
		Counterweight Extension (in)			
		0	12	24	36
Load Center From Fork Face (in)	24	22600	26200	29900	33500
	36	18300	21200	24100	27000
	48	15300	17800	20200	22700
	60	13200	15300	17400	19500
	72	11600	13500	15300	17200
	84	10300	12000	13600	15300

Lift Capacities w/Boom Only (lbs)					
		Counterweight Extension (in)			
		0	12	24	36
Load Center From Boom Face (in)	12	21900	25500	29100	32700
	24	17700	20600	23500	26400
	36	14800	17300	19700	22200
	48	12800	14900	17000	19100
	60	11200	13100	14900	16800
	72	10000	11700	13300	15000
	84	9000	10500	12000	13500
	96	8200	9600	10900	12300

Lift Capacities w/Forks & Boom (lbs)					
		Counterweight Extension (in)			
		0	12	24	36
Load Center From Boom Face (in)	24	16800	19700	22600	25500
	36	14100	16500	19000	21400
	48	12100	14200	16300	18400
	60	10600	12500	14300	16200
	72	9500	11100	12800	14400
	84	8600	10000	11500	13000
	96	7800	9100	10500	11900

****All Load Capacities are rated with the mast vertical.*

CUSTOM MOBILE EQUIPMENT
439 EAST HIGH STREET
BALDWIN CITY, KS 66006
P: 785-594-7474

VERSA-LIFT 25/35 - W/BOOM AND FORKS
WEIGHTS AND FLOOR LOADING

FRONT TRACK –	**44”**
REAR TRACK –	**52”**
OVERALL WIDTH –	**60”**
WHEELBASE EXTENDS –	**76” – 112”**

WEIGHTS W/BOOM AND FORKS

	NO LOAD	FRAME IN	FRAME OUT
		25,000# LOAD	35,000# LOAD
WEIGHT ON DRIVE AXLE –	17,000#	56,400#	66,400#
WEIGHT ON STEER AXLE –	18,000#	3,600#	3,600#
TOTAL WEIGHT –	35,000#	60,000#	70,000#

FLOOR LOADING WITH POLY TIRES

	EST. GROUND PRESSURE	EST. FOOTPRINT (PER WHEEL)
FLOOR LOADING – EMPTY	268 psi on steer	33.5 square inches each
FLOOR LOADING – LOADED (35,000 # AT 24” LC)	495 psi on drive	67.0 square inches each