60/80 Versa-Lift Spec Sheet

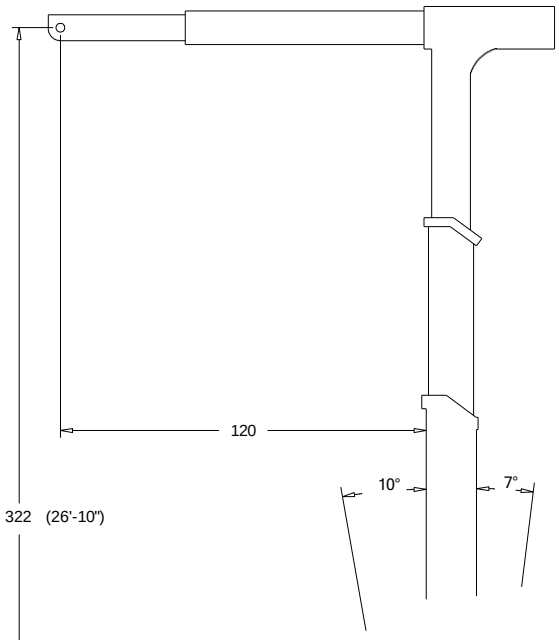

Capacity: 60,000 lbs. Frame Retracted
80,000 lbs. Frame Extended

Engine: 4.3L GM Engine

Transmission: Two Speed Hydrostatic

Grade: 31% Empty
15% Loaded

Tilt: 10° Forward
7° Back

Weight: Gross – 80,000 lbs.
Counterweights – 30,000 lbs.
Boom – 9,000 lbs.
Forks – 3,400 lbs.

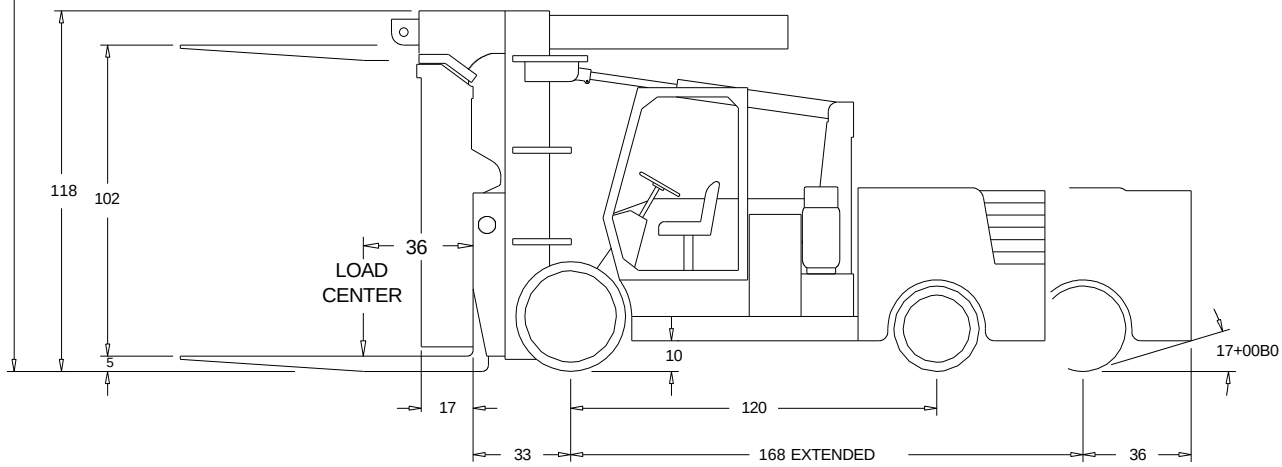

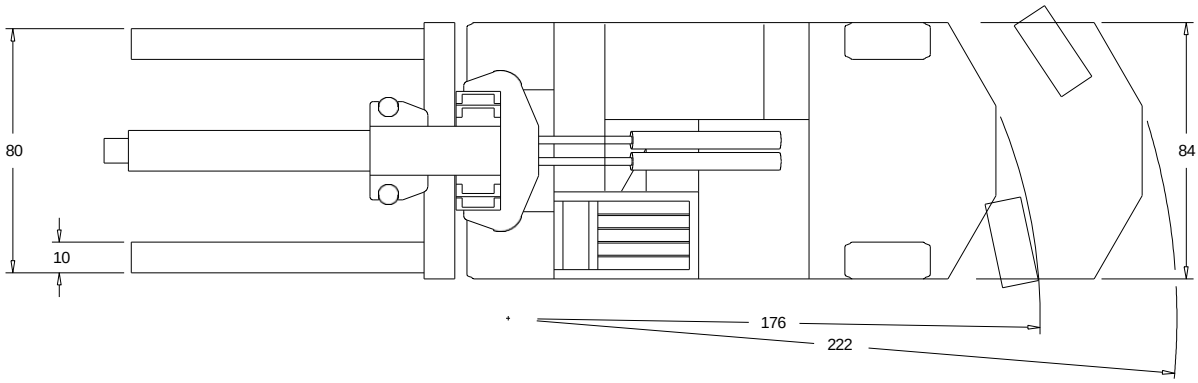

VERSA-LIFT

60/80 Versa-Lift with 0 Counterweight Slabs

Slab Weight (lbs)	*Number of Slabs*	*Standard Wheel Base*
5000	**0**	**120**

		Lift Capacities w/Forks Only (lbs)				
		Counter Weight Extension (in)				
		0	12	24	36	48
Load Center From Fork Face (in)	22	16100	18200	20300	22500	24600
	36	12800	14500	16200	17800	19500
	48	10900	12300	13700	15200	16600
	60	9400	10700	11900	13200	14400
	72	8300	9500	10600	11700	12800
	84	7500	8500	9500	10500	11500

		Lift Capacities w/Boom Only (lbs)				
		Counter Weight Extension (in)				
		0	12	24	36	48
Load Center From Boom Face (in)	6	12600	14700	16800	18900	20900
	24	9500	11000	12600	14200	15800
	36	8100	9500	10800	12200	13600
	48	7100	8300	9500	10700	11900
	60	6300	7400	8500	9500	10600
	72	5700	6700	7600	8600	9500
	84	5200	6100	6900	7800	8700
	96	4800	5600	6400	7200	7900
	108	4400	5100	5900	6600	7300
	120	4100	4800	5500	6100	6800

		Lift Capacities w/Forks & Boom (lbs)				
		Counter Weight Extension (in)				
		0	12	24	36	48
Load Center From Boom Face (in)	24	7500	9100	10600	12200	13800
	36	6400	7800	9100	10500	11800
	48	5600	6800	8000	9200	10400
	60	5000	6100	7100	8200	9200
	72	4500	5500	6400	7400	8300
	84	4100	5000	5800	6700	7600

****All Load Capacities are Rated with the Mast Vertical*

60/80 Versa-Lift with 1 Counterweight Slabs

Slab Weight (lbs)	*Number of Slabs*	*Standard Wheel Base*
5000	**1**	**120**

		Lift Capacities w/Forks Only (lbs)				
		Counter Weight Extension (in)				
		0	12	24	36	48
Load Center From Fork Face (in)	22	25000	28000	31000	34000	37100
	36	19800	22200	24600	27000	29400
	48	16900	18900	20900	23000	25000
	60	14700	16400	18200	20000	21700
	72	13000	14500	16100	17700	19200
	84	11600	13000	14400	15800	17200

		Lift Capacities w/Boom Only (lbs)				
		Counter Weight Extension (in)				
		0	12	24	36	48
Load Center From Boom Face (in)	6	21300	24300	27200	30200	33200
	24	16000	18300	20500	22800	25000
	36	13800	15700	17600	19500	21500
	48	12100	13800	15400	17100	18800
	60	10700	12200	13700	15200	16700
	72	9700	11000	12400	13700	15100
	84	8800	10000	11300	12500	13700
	96	8100	9200	10300	11500	12600
	108	7500	8500	9500	10600	11600
	120	6900	7900	8900	9800	10800

		Lift Capacities w/Forks & Boom (lbs)				
		Counter Weight Extension (in)				
		0	12	24	36	48
Load Center From Boom Face (in)	24	14000	16300	18500	20800	23000
	36	12100	14000	15900	17800	19700
	48	10600	12300	13900	15600	17300
	60	9400	10900	12400	13900	15400
	72	8500	9800	11200	12500	13900
	84	7700	8900	10200	11400	12600

****All Load Capacities are Rated with the Mast Vertical*

60/80 Versa-Lift with 2 Counterweight Slabs

Slab Weight (lbs)	*Number of Slabs*	*Standard Wheel Base*
5000	**2**	**120**

		Lift Capacities w/Forks Only (lbs)				
		Counter Weight Extension (in)				
		0	12	24	36	48
Load Center From Fork Face (in)	22	33900	37800	41700	45600	49500
	36	26900	30000	33100	36200	39300
	48	22900	25500	28100	30800	33400
	60	19900	22200	24500	26800	29100
	72	17600	19600	21600	23700	25700
	84	15800	17600	19400	21200	23000

		Lift Capacities w/Boom Only (lbs)				
		Counter Weight Extension (in)				
		0	12	24	36	48
Load Center From Boom Face (in)	6	30000	33900	37700	41500	45400
	24	22600	25500	28400	31300	34200
	36	19400	21900	24400	26900	29400
	48	17000	19200	21400	23600	25700
	60	15100	17100	19000	21000	22900
	72	13600	15400	17100	18900	20600
	84	12400	14000	15600	17200	18800
	96	11400	12800	14300	15800	17200
	108	10500	11900	13200	14600	15900
	120	9800	11000	12300	13500	14800

		Lift Capacities w/Forks & Boom (lbs)				
		Counter Weight Extension (in)				
		0	12	24	36	48
Load Center From Boom Face (in)	24	20600	23500	26400	29300	32200
	36	17700	20200	22700	25200	27700
	48	15500	17700	19900	22100	24200
	60	13800	15800	17700	19600	21600
	72	12400	14200	15900	17700	19400
	84	11300	12900	14500	16100	17700

****All Load Capacities are Rated with the Mast Vertical*

60/80 Versa-Lift with 3 Counterweight Slabs

Slab Weight (lbs)	*Number of Slabs*	*Standard Wheel Base*
5000	**3**	**120**

		Lift Capacities w/Forks Only (lbs)				
		Counter Weight Extension (in)				
		0	12	24	36	48
Load Center From Fork Face (in)	22	42700	47500	52300	57100	61900
	36	33900	37800	41600	45400	49200
	48	28900	32100	35300	38600	41800
	60	25100	27900	30700	33500	36400
	72	22200	24700	27200	29700	32200
	84	19900	22100	24400	26600	28800

		Lift Capacities w/Boom Only (lbs)				
		Counter Weight Extension (in)				
		0	12	24	36	48
Load Center From Boom Face (in)	6	38700	43500	48200	52900	57600
	24	29200	32700	36300	39800	43400
	36	25100	28100	31200	34200	37300
	48	22000	24600	27300	30000	32700
	60	19600	21900	24300	26700	29100
	72	17600	19800	21900	24000	26200
	84	16000	18000	19900	21900	23800
	96	14700	16500	18300	20100	21800
	108	13600	15200	16900	18500	20200
	120	12600	14100	15700	17200	18700

		Lift Capacities w/Forks & Boom (lbs)				
		Counter Weight Extension (in)				
		0	12	24	36	48
Load Center From Boom Face (in)	24	27200	30800	34300	37900	41400
	36	23400	26400	29500	32500	35600
	48	20500	23100	25800	28500	31200
	60	18200	20600	23000	25400	27700
	72	16400	18600	20700	22800	25000
	84	14900	16900	18800	20800	22700

****All Load Capacities are Rated with the Mast Vertical*

60/80 Versa-Lift with 4 Counterweight Slabs

Slab Weight (lbs)	*Number of Slabs*	*Standard Wheel Base*
5000	**4**	**120**

		Lift Capacities w/Forks Only (lbs)				
		Counter Weight Extension (in)				
		0	12	24	36	48
Load Center From Fork Face (in)	22	51600	57300	63000	68700	74400
	36	41000	45500	50000	54600	59100
	48	34900	38700	42500	46400	50200
	60	30300	33600	37000	40300	43700
	72	26800	29800	32700	35700	38600
	84	24000	26700	29300	32000	34600

		Lift Capacities w/Boom Only (lbs)				
		Counter Weight Extension (in)				
		0	12	24	36	48
Load Center From Boom Face (in)	6	47500	53100	58600	64200	69800
	24	35800	40000	44200	48400	52600
	36	30700	34300	37900	41600	45200
	48	26900	30100	33300	36400	39600
	60	24000	26800	29600	32400	35200
	72	21600	24100	26700	29200	31700
	84	19600	21900	24300	26600	28900
	96	18000	20100	22200	24400	26500
	108	16600	18600	20500	22500	24500
	120	15500	17300	19100	20900	22700

		Lift Capacities w/Forks & Boom (lbs)				
		Counter Weight Extension (in)				
		0	12	24	36	48
Load Center From Boom Face (in)	24	33800	38000	42200	46400	50600
	36	29000	32600	36200	39800	43500
	48	25400	28600	31800	34900	38100
	60	22600	25400	28300	31100	33900
	72	20400	22900	25500	28000	30500
	84	18500	20800	23200	25500	27800

****All Load Capacities are Rated with the Mast Vertical*

60/80 Versa-Lift with 5 Counterweight Slabs

Slab Weight (lbs)	*Number of Slabs*	*Standard Wheel Base*
5000	**5**	**120**

		Lift Capacities w/Forks Only (lbs)				
		Counter Weight Extension (in)				
		0	12	24	36	48
Load Center From Fork Face (in)	22	60500	67100	73700	80300	86800
	36	48100	53300	58500	63700	69000
	48	40900	45300	49700	54200	58600
	60	35500	39400	43200	47100	51000
	72	31400	34800	38300	41700	45100
	84	28200	31200	34300	37400	40400

		Lift Capacities w/Boom Only (lbs)				
		Counter Weight Extension (in)				
		0	12	24	36	48
Load Center From Boom Face (in)	6	56200	62700	69100	75600	82000
	24	42300	47200	52100	56900	61800
	36	36400	40500	44700	48900	53100
	48	31900	35500	39200	42900	46500
	60	28400	31600	34900	38100	41400
	72	25500	28500	31400	34400	37300
	84	23200	25900	28600	31300	33900
	96	21300	23800	26200	28700	31100
	108	19700	22000	24200	26500	28700
	120	18300	20400	22500	24600	26700

		Lift Capacities w/Forks & Boom (lbs)				
		Counter Weight Extension (in)				
		0	12	24	36	48
Load Center From Boom Face (in)	24	40400	45200	50100	54900	59800
	36	34700	38800	43000	47200	51400
	48	30400	34000	37700	41400	45000
	60	27000	30300	33500	36800	40100
	72	24300	27300	30200	33200	36100
	84	22100	24800	27500	30200	32800

****All Load Capacities are Rated with the Mast Vertical*

60/80 Versa-Lift with 6 Counterweight Slabs

Slab Weight (lbs)	*Number of Slabs*	*Standard Wheel Base*
5000	**6**	**120**

		Lift Capacities w/Forks Only (lbs)				
		Counter Weight Extension (in)				
		0	12	24	36	48
Load Center From Fork Face (in)	22	69400	76900	84300	91800	99300
	36	55100	61000	67000	72900	78800
	48	46900	51900	56900	62000	67000
	60	40700	45100	49500	53900	58300
	72	36000	39900	43800	47700	51500
	84	32300	35800	39300	42700	46200

		Lift Capacities w/Boom Only (lbs)				
		Counter Weight Extension (in)				
		0	12	24	36	48
Load Center From Boom Face (in)	6	64900	72300	79600	86900	94300
	24	48900	54400	60000	65500	71000
	36	42000	46800	51500	56200	61000
	48	36800	41000	45100	49300	53400
	60	32800	36500	40200	43900	47600
	72	29500	32800	36200	39500	42800
	84	26900	29900	32900	35900	39000
	96	24600	27400	30200	33000	35800
	108	22700	25300	27900	30500	33000
	120	21100	23500	25900	28300	30700

		Lift Capacities w/Forks & Boom (lbs)				
		Counter Weight Extension (in)				
		0	12	24	36	48
Load Center From Boom Face (in)	24	46900	52400	58000	63500	69000
	36	40300	45000	49800	54500	59300
	48	35300	39500	43600	47800	51900
	60	31400	35100	38800	42500	46200
	72	28300	31600	35000	38300	41600
	84	25800	28800	31800	34900	37900

****All Load Capacities are Rated with the Mast Vertical*

60/80 Versa-Lift w/ Side Shift Carriage
0 Counterweight Slabs

Slab Weight (lbs)	*Number of Slabs*	*Standard Wheel Base*
5000	**0**	**120**

		Lift Capacities w/Forks Only (lbs)				
		Counter Weight Extension (in)				
		0	12	24	36	48
Load Center From Fork Face (in)	24	13200	15100	17000	18900	20800
	36	11000	12600	14200	15800	17300
	48	9400	10800	12200	13500	14900
	60	8300	9500	10700	11800	13000
	72	7400	8400	9500	10500	11600
	84	6600	7600	8500	9500	10400

		Lift Capacities w/Boom Only (lbs)				
		Counter Weight Extension (in)				
		0	12	24	36	48
Load Center From Boom Face (in)	6	10400	12400	14300	16200	18200
	24	8000	9500	11000	12500	14000
	36	7000	8200	9500	10800	12100
	48	6100	7300	8400	9500	10700
	60	5500	6500	7500	8500	9500
	72	5000	5900	6800	7700	8600
	84	4500	5400	6200	7000	7900
	96	4200	4900	5700	6500	7200
	108	3900	4600	5300	6000	6700
	120	3600	4300	4900	5600	6200

		Lift Capacities w/Forks & Boom (lbs)				
		Counter Weight Extension (in)				
		0	12	24	36	48
Load Center From Boom Face (in)	24	6200	7600	9100	10600	12100
	36	5300	6600	7900	9200	10500
	48	4700	5800	7000	8100	9200
	60	4200	5200	6200	7200	8300
	72	3800	4700	5600	6600	7500
	84	3500	4300	5100	6000	6800

****All Load Capacities are Rated with the Mast Vertical*

60/80 Versa-Lift w/ Side Shift Carriage
1 Counterweight Slabs

Slab Weight (lbs)	*Number of Slabs*	*Standard Wheel Base*
5000	**1**	**120**

		Lift Capacities w/Forks Only (lbs)				
		Counter Weight Extension (in)				
		0	12	24	36	48
Load Center From Fork Face (in)	24	21100	23800	26500	29100	31800
	36	17600	19800	22100	24300	26600
	48	15100	17000	19000	20900	22800
	60	13200	14900	16600	18300	20000
	72	11800	13300	14800	16300	17800
	84	10600	12000	13300	14700	16000

		Lift Capacities w/Boom Only (lbs)				
		Counter Weight Extension (in)				
		0	12	24	36	48
Load Center From Boom Face (in)	6	18500	21200	23900	26700	29400
	24	14200	16300	18400	20500	22600
	36	12300	14100	15900	17800	19600
	48	10900	12500	14100	15700	17300
	60	9700	11100	12600	14000	15400
	72	8800	10100	11400	12700	14000
	84	8000	9200	10400	11600	12800
	96	7400	8500	9600	10600	11700
	108	6800	7800	8800	9900	10900
	120	6400	7300	8200	9200	10100

		Lift Capacities w/Forks & Boom (lbs)				
		Counter Weight Extension (in)				
		0	12	24	36	48
Load Center From Boom Face (in)	24	12300	14400	16500	18600	20700
	36	10700	12500	14300	16100	18000
	48	9400	11000	12600	14200	15800
	60	8400	9900	11300	12700	14200
	72	7600	8900	10200	11500	12800
	84	7000	8100	9300	10500	11700

****All Load Capacities are Rated with the Mast Vertical*

60/80 Versa-Lift w/ Side Shift Carriage
2 Counterweight Slabs

Slab Weight (lbs)	*Number of Slabs*	*Standard Wheel Base*
5000	**2**	**120**

		Lift Capacities w/Forks Only (lbs)				
		Counter Weight Extension (in)				
		0	12	24	36	48
Load Center From Fork Face (in)	24	29000	32500	35900	39400	42900
	36	24200	27100	30000	32900	35800
	48	20800	23300	25800	28300	30700
	60	18200	20400	22600	24700	26900
	72	16200	18100	20100	22000	24000
	84	14600	16300	18100	19800	21600

		Lift Capacities w/Boom Only (lbs)				
		Counter Weight Extension (in)				
		0	12	24	36	48
Load Center From Boom Face (in)	6	26500	30000	33600	37100	40600
	24	20400	23100	25800	28500	31200
	36	17600	20000	22400	24700	27100
	48	15600	17600	19700	21800	23900
	60	13900	15800	17600	19500	21400
	72	12600	14300	16000	17600	19300
	84	11500	13000	14600	16100	17600
	96	10600	12000	13400	14800	16200
	108	9800	11100	12400	13700	15000
	120	9100	10300	11500	12800	14000

		Lift Capacities w/Forks & Boom (lbs)				
		Counter Weight Extension (in)				
		0	12	24	36	48
Load Center From Boom Face (in)	24	18500	21200	23900	26600	29400
	36	16000	18400	20700	23100	25400
	48	14100	16200	18300	20400	22400
	60	12600	14500	16400	18200	20100
	72	11400	13100	14800	16500	18200
	84	10400	12000	13500	15000	16600

****All Load Capacities are Rated with the Mast Vertical*

60/80 Versa-Lift w/ Side Shift Carriage
3 Counterweight Slabs

Slab Weight (lbs)	*Number of Slabs*	*Standard Wheel Base*
5000	**3**	**120**

		Lift Capacities w/Forks Only (lbs)				
		Counter Weight Extension (in)				
		0	12	24	36	48
Load Center From Fork Face (in)	24	36900	41200	45400	49700	54000
	36	30800	34400	37900	41500	45100
	48	26400	29500	32600	35600	38700
	60	23200	25800	28500	31200	33900
	72	20600	23000	25400	27800	30100
	84	18600	20700	22900	25000	27100

		Lift Capacities w/Boom Only (lbs)				
		Counter Weight Extension (in)				
		0	12	24	36	48
Load Center From Boom Face (in)	6	34500	38900	43200	47600	51900
	24	26500	29900	33200	36500	39900
	36	23000	25900	28800	31700	34500
	48	20300	22800	25400	27900	30500
	60	18100	20400	22700	25000	27300
	72	16400	18500	20500	22600	24700
	84	15000	16900	18700	20600	22500
	96	13800	15500	17200	19000	20700
	108	12800	14400	16000	17600	19200
	120	11900	13400	14900	16400	17800

		Lift Capacities w/Forks & Boom (lbs)				
		Counter Weight Extension (in)				
		0	12	24	36	48
Load Center From Boom Face (in)	24	24700	28000	31300	34700	38000
	36	21400	24300	27200	30000	32900
	48	18900	21400	23900	26500	29000
	60	16900	19100	21400	23700	26000
	72	15300	17300	19400	21400	23500
	84	13900	15800	17700	19600	21500

****All Load Capacities are Rated with the Mast Vertical*

60/80 Versa-Lift w/ Side Shift Carriage
4 Counterweight Slabs

Slab Weight (lbs)	*Number of Slabs*	*Standard Wheel Base*
5000	**4**	**120**

		Lift Capacities w/Forks Only (lbs)				
		Counter Weight Extension (in)				
		0	12	24	36	48
Load Center From Fork Face (in)	24	44800	49800	54900	60000	65000
	36	37400	41600	45800	50100	54300
	48	32100	35700	39400	43000	46600
	60	28100	31300	34500	37600	40800
	72	25000	27800	30700	33500	36300
	84	22500	25100	27600	30200	32700

		Lift Capacities w/Boom Only (lbs)				
		Counter Weight Extension (in)				
		0	12	24	36	48
Load Center From Boom Face (in)	6	42600	47700	52900	58000	63100
	24	32700	36700	40600	44600	48500
	36	28300	31800	35200	38600	42000
	48	25000	28000	31000	34100	37100
	60	22400	25100	27800	30500	33200
	72	20200	22700	25100	27600	30000
	84	18500	20700	22900	25200	27400
	96	17000	19000	21100	23100	25200
	108	15700	17600	19500	21400	23300
	120	14600	16400	18200	19900	21700

		Lift Capacities w/Forks & Boom (lbs)				
		Counter Weight Extension (in)				
		0	12	24	36	48
Load Center From Boom Face (in)	24	30800	34800	38700	42700	46700
	36	26700	30100	33600	37000	40400
	48	23600	26600	29600	32600	35600
	60	21100	23800	26500	29200	31900
	72	19100	21500	24000	26400	28800
	84	17400	19600	21900	24100	26300

****All Load Capacities are Rated with the Mast Vertical*

60/80 Versa-Lift w/ Side Shift Carriage
5 Counterweight Slabs

Slab Weight (lbs)	*Number of Slabs*	*Standard Wheel Base*
5000	**5**	**120**

		Lift Capacities w/Forks Only (lbs)				
		Counter Weight Extension (in)				
		0	12	24	36	48
Load Center From Fork Face (in)	24	52700	58500	64400	70200	76100
	36	44000	48900	53800	58600	63500
	48	37800	42000	46100	50300	54500
	60	33100	36800	40400	44100	47800
	72	29400	32700	36000	39200	42500
	84	26500	29400	32400	35300	38300

		Lift Capacities w/Boom Only (lbs)				
		Counter Weight Extension (in)				
		0	12	24	36	48
Load Center From Boom Face (in)	6	50600	56600	62500	68400	74400
	24	38900	43500	48000	52600	57200
	36	33700	37700	41600	45600	49500
	48	29700	33200	36700	40200	43700
	60	26600	29700	32800	36000	39100
	72	24000	26900	29700	32500	35300
	84	22000	24500	27100	29700	32300
	96	20200	22600	24900	27300	29700
	108	18700	20900	23100	25300	27500
	120	17400	19400	21500	23500	25600

		Lift Capacities w/Forks & Boom (lbs)				
		Counter Weight Extension (in)				
		0	12	24	36	48
Load Center From Boom Face (in)	24	37000	41600	46200	50700	55300
	36	32100	36000	40000	43900	47900
	48	28300	31800	35300	38800	42300
	60	25300	28400	31500	34700	37800
	72	22900	25700	28500	31400	34200
	84	20900	23500	26100	28600	31200

****All Load Capacities are Rated with the Mast Vertical*

60/80 Versa-Lift w/ Side Shift Carriage
6 Counterweight Slabs

Slab Weight (lbs)	*Number of Slabs*	*Standard Wheel Base*
5000	**6**	**120**

		Lift Capacities w/Forks Only (lbs)				
		Counter Weight Extension (in)				
		0	12	24	36	48
Load Center From Fork Face (in)	24	60600	67200	73900	80500	87100
	36	50600	56100	61700	67200	72800
	48	43400	48200	52900	57700	62500
	60	38000	42200	46400	50500	54700
	72	33800	37600	41300	45000	48700
	84	30500	33800	37200	40500	43800

		Lift Capacities w/Boom Only (lbs)				
		Counter Weight Extension (in)				
		0	12	24	36	48
Load Center From Boom Face (in)	6	58600	65400	72100	78900	85600
	24	45100	50300	55400	60600	65800
	36	39000	43500	48000	52500	57000
	48	34400	38400	42400	46300	50300
	60	30800	34300	37900	41400	45000
	72	27900	31100	34300	37500	40700
	84	25400	28400	31300	34200	37100
	96	23400	26100	28800	31500	34200
	108	21700	24200	26600	29100	31600
	120	20200	22500	24800	27100	29400

		Lift Capacities w/Forks & Boom (lbs)				
		Counter Weight Extension (in)				
		0	12	24	36	48
Load Center From Boom Face (in)	24	43200	48400	53600	58800	63900
	36	37400	41900	46400	50900	55400
	48	33000	37000	40900	44900	48900
	60	29500	33100	36600	40200	43700
	72	26700	29900	33100	36300	39500
	84	24400	27300	30200	33200	36100

****All Load Capacities are Rated with the Mast Vertical*

Custom Mobile Equipment, Inc.
439 East High Street • Baldwin City, Kansas 66006
(785) 594-7474 • Fax: (785) 594-7475

Manufacturers of the VERSA-LIFT

WEIGHTS AND FLOOR LOADINGS
VERSA-LIFT 60/80 WITH BOOM AND FORKS

FRONT TRACK-	62"
REAR TRACK -	72"
OVERALL WIDTH -	84"
WHEELBASE EXTENDS -	120" TO 168"

WEIGHTS

	NO LOAD	FRAME OUT (80,000# LOAD)	FRAME IN (60,000# LOAD)
WEIGHT ON DRIVE AXLE -	39,000#	151,000#	131,500#
WEIGHT ON STEER AXLE -	40,000#	7,500#	7,500#
TOTAL WEIGHT -	79,000#	159,000#	139,000#

FLOOR LOADING WITH POLY TIRES

	GROUND PRESSURE	FOOTPRINT (per wheel)
FLOOR LOADING - EMPTY	370 psi ON STEER	50.79 square inches each
FLOOR LOADING - LOADED 80,000# AT 36" LOAD CENTER	754 psi ON DRIVE	100.02 square inches each