100/140 Versa-Lift Spec Sheet

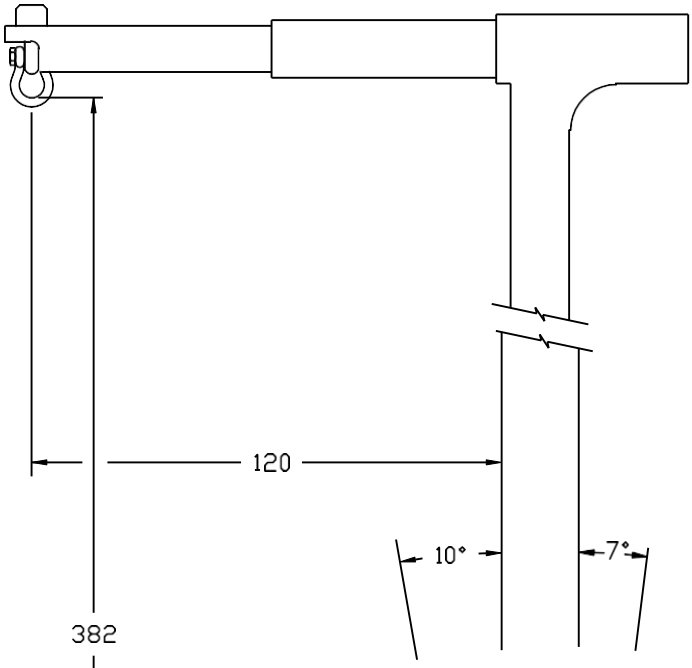

Capacity: 100,000 lbs. Frame Retracted
140,000 lbs. Frame Extended

Engine: 4.3L GM Engine

Transmission: Two Speed Hydrostatic

Grade: 50% Empty
30% Loaded

Tilt: 10° Forward
7° Back

Weight: Gross – 120,000 lbs.
Counterweights – 42,300 lbs.
Boom – 13,000 lbs.
Forks – 5,100 lbs.

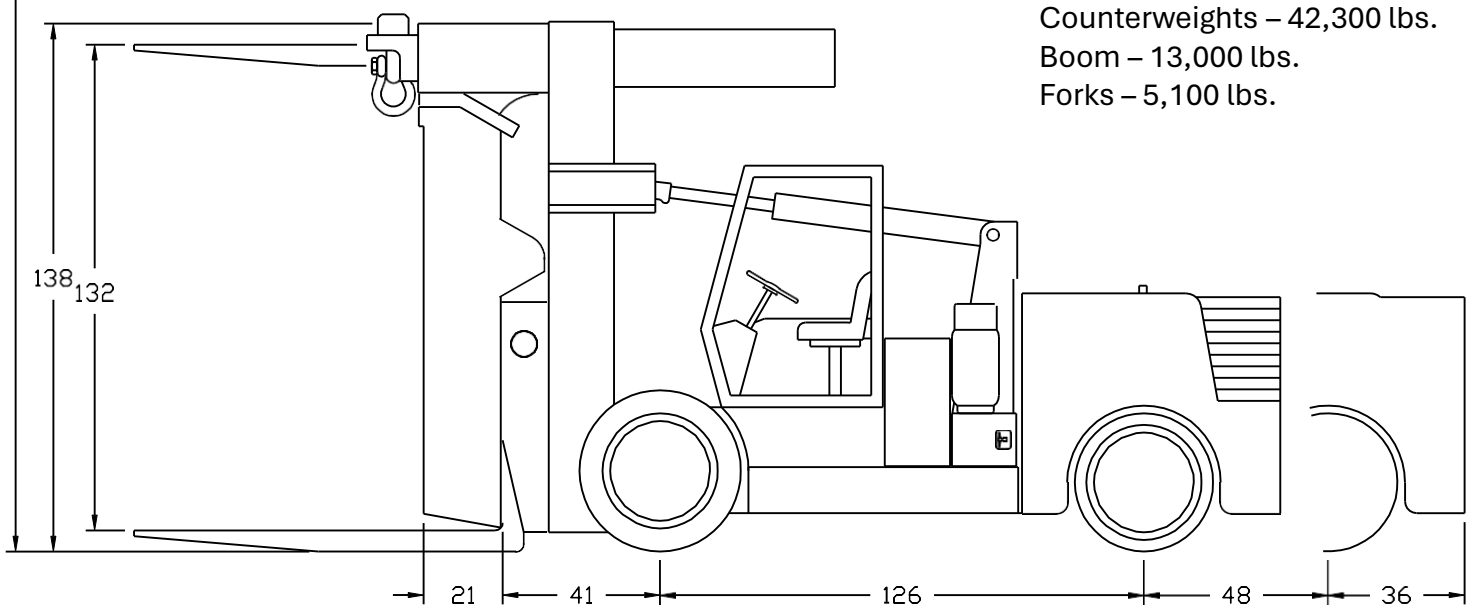

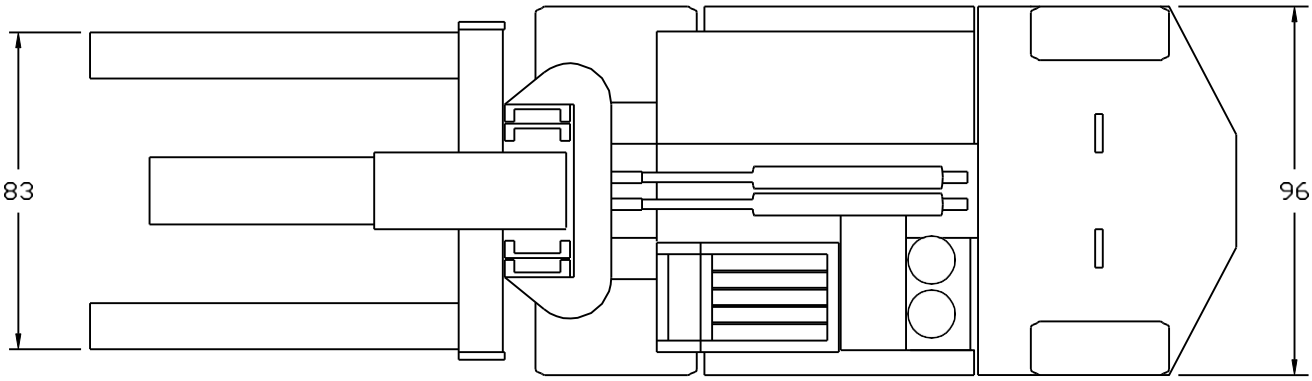

VERSA-LIFT

85/115 Versa-Lift with 0 Counterweight Slabs

Slab Weight (lbs)	*Number of Slabs*	*Standard Wheel Base*
4700	**0**	**126**

		Lift Capacities w/Forks Only (lbs)				
		Counter Weight Extension (in)				
		0	12	24	36	48
Load Center From Fork Face (in)	24	36100	39500	43000	46400	49800
	36	30500	33400	36300	39200	42100
	48	26400	28900	31400	33900	36400
	60	23200	25400	27600	29900	32100
	72	20800	22700	24700	26700	28700
	84	18800	20600	22300	24100	25900

		Lift Capacities w/Boom Only (lbs)				
		Counter Weight Extension (in)				
		0	12	24	36	48
Load Center From Boom Face (in)	8	30300	33500	36700	39900	43100
	16	26800	29700	32500	35400	38300
	24	24000	26600	29200	31800	34400
	32	21600	24000	26400	28700	31100
	40	19600	21800	24000	26200	28400
	48	17900	20000	22000	24000	26000
	56	16500	18400	20200	22100	24000
	64	15200	17000	18700	20500	22300
	72	14200	15800	17500	19200	20800
	80	13300	14800	16400	18000	19600
	88	12500	14000	15400	16900	18400
	96	11700	13200	14600	16000	17400
	102	11300	12600	14000	15300	16700
	112	10500	11800	13100	14400	15600
	120	10000	11200	12400	13600	14900

		Lift Capacities w/Forks & Boom (lbs)				
		Counter Weight Extension (in)				
		0	12	24	36	48
Load Center From Boom Face (in)	12	24400	27400	30400	33500	36500
	24	21000	23600	26200	28800	31400
	36	18400	20700	23000	25300	27500
	48	16400	18400	20500	22500	24500
	60	14800	16600	18500	20300	22100
	72	13500	15100	16800	18500	20100

****All Load Capacities are Rated with the Mast Vertical*

85/115 Versa-Lift with 1 Counterweight Slabs

Slab Weight (lbs)	*Number of Slabs*	*Standard Wheel Base*
4700	**1**	**126**

		Lift Capacities w/Forks Only (lbs)				
		Counter Weight Extension (in)				
		0	12	24	36	48
Load Center From Fork Face (in)	24	43400	47500	51600	55800	59900
	36	36600	40100	43600	47100	50600
	48	31700	34700	37700	40700	43700
	60	27900	30600	33200	35900	38500
	72	25000	27300	29700	32100	34500
	84	22600	24700	26900	29000	31100

		Lift Capacities w/Boom Only (lbs)				
		Counter Weight Extension (in)				
		0	12	24	36	48
Load Center From Boom Face (in)	8	37100	40900	44700	48600	52400
	16	32900	36300	39800	43200	46600
	24	29500	32600	35700	38800	42000
	32	26600	29500	32400	35200	38100
	40	24300	26900	29500	32200	34800
	48	22200	24700	27100	29600	32000
	56	20500	22700	25000	27300	29600
	64	18900	21100	23200	25300	27500
	72	17700	19700	21700	23700	25700
	80	16600	18500	20400	22300	24200
	88	15600	17400	19200	21000	22800
	96	14700	16400	18100	19800	21500
	102	14100	15800	17400	19100	20700
	112	13200	14800	16300	17900	19400
	120	12600	14000	15500	17000	18500

		Lift Capacities w/Forks & Boom (lbs)				
		Counter Weight Extension (in)				
		0	12	24	36	48
Load Center From Boom Face (in)	12	30800	34400	38100	41700	45300
	24	26500	29600	32700	35900	39000
	36	23300	26000	28700	31500	34200
	48	20700	23200	25600	28000	30500
	60	18700	20900	23100	25300	27500
	72	17000	19000	21000	23000	25000

****All Load Capacities are Rated with the Mast Vertical*

85/115 Versa-Lift with 2 Counterweight Slabs

Slab Weight (lbs)	*Number of Slabs*	*Standard Wheel Base*
4700	**2**	**126**

		Lift Capacities w/Forks Only (lbs)				
		Counter Weight Extension (in)				
		0	12	24	36	48
Load Center From Fork Face (in)	24	50700	55500	60300	65100	70000
	36	42800	46800	50900	55000	59100
	48	37000	40500	44000	47600	51100
	60	32600	35700	38800	41900	45000
	72	29100	31900	34700	37500	40200
	84	26300	28900	31400	33900	36400

		Lift Capacities w/Boom Only (lbs)				
		Counter Weight Extension (in)				
		0	12	24	36	48
Load Center From Boom Face (in)	8	43800	48300	52800	57300	61700
	16	38900	43000	47000	51000	55000
	24	35000	38600	42300	45900	49600
	32	31700	35000	38400	41700	45000
	40	28900	32000	35100	38100	41200
	48	26500	29400	32200	35100	37900
	56	24500	27100	29800	32500	35100
	64	22700	25200	27700	30200	32700
	72	21200	23600	25900	28300	30600
	80	19900	22100	24400	26600	28800
	88	18800	20900	23000	25100	27100
	96	17700	19700	21700	23700	25700
	102	17000	18900	20900	22800	24700
	112	15900	17800	19600	21400	23200
	120	15200	16900	18600	20300	22100

		Lift Capacities w/Forks & Boom (lbs)				
		Counter Weight Extension (in)				
		0	12	24	36	48
Load Center From Boom Face (in)	12	37200	41400	45700	49900	54200
	24	32000	35700	39300	43000	46600
	36	28100	31300	34500	37700	40900
	48	25000	27900	30700	33600	36400
	60	22600	25100	27700	30300	32800
	72	20500	22900	25200	27600	29900

****All Load Capacities are Rated with the Mast Vertical*

85/115 Versa-Lift with 3 Counterweight Slabs

Slab Weight (lbs)	*Number of Slabs*	*Standard Wheel Base*
4700	**3**	**126**

		Lift Capacities w/Forks Only (lbs)				
		Counter Weight Extension (in)				
		0	12	24	36	48
Load Center From Fork Face (in)	24	58000	63500	69000	74500	80000
	36	48900	53600	58200	62900	67600
	48	42300	46400	50400	54400	58400
	60	37300	40800	44400	48000	51500
	72	33300	36500	39700	42900	46000
	84	30100	33000	35900	38700	41600

		Lift Capacities w/Boom Only (lbs)				
		Counter Weight Extension (in)				
		0	12	24	36	48
Load Center From Boom Face (in)	8	50600	55700	60800	66000	71100
	16	45000	49600	54200	58800	63400
	24	40500	44700	48800	53000	57200
	32	36700	40500	44400	48200	52000
	40	33600	37100	40600	44100	47600
	48	30800	34100	37400	40600	43900
	56	28500	31500	34600	37600	40700
	64	26500	29300	32200	35000	37800
	72	24800	27500	30100	32800	35500
	80	23300	25800	28300	30900	33400
	88	21900	24300	26700	29100	31500
	96	20700	23000	25300	27600	29800
	102	19900	22100	24300	26500	28700
	112	18700	20700	22800	24900	26900
	120	17800	19700	21700	23700	25700

		Lift Capacities w/Forks & Boom (lbs)				
		Counter Weight Extension (in)				
		0	12	24	36	48
Load Center From Boom Face (in)	12	43600	48500	53300	58100	63000
	24	37500	41700	45900	50000	54200
	36	32900	36600	40200	43900	47600
	48	29300	32600	35900	39100	42400
	60	26400	29400	32300	35300	38200
	72	24100	26800	29400	32100	34800

****All Load Capacities are Rated with the Mast Vertical*

85/115 Versa-Lift with 4 Counterweight Slabs

Slab Weight (lbs)	*Number of Slabs*	*Standard Wheel Base*
4700	**4**	**126**

		Lift Capacities w/Forks Only (lbs)				
		Counter Weight Extension (in)				
		0	12	24	36	48
Load Center From Fork Face (in)	24	65200	71500	77700	83900	90100
	36	55100	60300	65600	70800	76100
	48	47600	52200	56700	61300	65800
	60	42000	46000	50000	54000	58000
	72	37500	41100	44700	48300	51800
	84	33900	37200	40400	43600	46800

		Lift Capacities w/Boom Only (lbs)				
		Counter Weight Extension (in)				
		0	12	24	36	48
Load Center From Boom Face (in)	8	57400	63100	68900	74700	80400
	16	51100	56300	61500	66600	71800
	24	46000	50700	55400	60100	64800
	32	41800	46100	50400	54700	59000
	40	38200	42200	46100	50100	54000
	48	35200	38800	42500	46200	49800
	56	32500	35900	39400	42800	46200
	64	30200	33400	36600	39800	43000
	72	28300	31300	34300	37400	40400
	80	26600	29500	32300	35100	38000
	88	25100	27800	30500	33200	35900
	96	23700	26300	28900	31400	34000
	102	22800	25300	27700	30200	32700
	112	21400	23700	26000	28400	30700
	120	20400	22600	24800	27000	29300

		Lift Capacities w/Forks & Boom (lbs)				
		Counter Weight Extension (in)				
		0	12	24	36	48
Load Center From Boom Face (in)	12	50000	55500	60900	66400	71800
	24	43000	47700	52400	57100	61800
	36	37800	41900	46000	50100	54200
	48	33600	37300	41000	44700	48300
	60	30300	33600	37000	40300	43600
	72	27600	30600	33600	36700	39700

****All Load Capacities are Rated with the Mast Vertical*

85/115 Versa-Lift with 5 Counterweight Slabs

Slab Weight (lbs)	*Number of Slabs*	*Standard Wheel Base*
4700	**5**	**126**

		Lift Capacities w/Forks Only (lbs)				
		Counter Weight Extension (in)				
		0	12	24	36	48
Load Center From Fork Face (in)	24	72500	79400	86300	93300	100200
	36	61200	67100	72900	78700	84600
	48	53000	58000	63100	68100	73200
	60	46700	51100	55600	60000	64500
	72	41700	45700	49700	53600	57600
	84	37700	41300	44900	48500	52100

		Lift Capacities w/Boom Only (lbs)				
		Counter Weight Extension (in)				
		0	12	24	36	48
Load Center From Boom Face (in)	8	64100	70500	77000	83400	89800
	16	57200	62900	68700	74400	80200
	24	51500	56700	61900	67200	72400
	32	46800	51600	56400	61100	65900
	40	42800	47200	51600	56100	60500
	48	39500	43500	47600	51700	55800
	56	36500	40300	44100	47900	51800
	64	34000	37500	41100	44700	48200
	72	31800	35200	38500	41900	45200
	80	30000	33100	36300	39400	42600
	88	28300	31300	34200	37200	40200
	96	26700	29600	32400	35300	38100
	102	25700	28400	31200	33900	36600
	112	24100	26700	29300	31900	34400
	120	23000	25400	27900	30400	32800

		Lift Capacities w/Forks & Boom (lbs)				
		Counter Weight Extension (in)				
		0	12	24	36	48
Load Center From Boom Face (in)	12	56400	62500	68500	74600	80700
	24	48500	53800	59000	64200	69400
	36	42600	47200	51800	56300	60900
	48	37900	42000	46100	50200	54300
	60	34200	37900	41600	45300	48900
	72	31200	34500	37900	41200	44600

****All Load Capacities are Rated with the Mast Vertical*

85/115 Versa-Lift with 6 Counterweight Slabs

Slab Weight (lbs)	*Number of Slabs*	*Standard Wheel Base*
4700	**6**	**126**

		Lift Capacities w/Forks Only (lbs)				
		Counter Weight Extension (in)				
		0	12	24	36	48
Load Center From Fork Face (in)	24	79800	87400	95000	102600	110200
	36	67400	73800	80200	86600	93000
	48	58300	63800	69400	74900	80500
	60	51400	56300	61200	66000	70900
	72	45900	50300	54700	59000	63400
	84	41500	45500	49400	53400	57300

		Lift Capacities w/Boom Only (lbs)				
		Counter Weight Extension (in)				
		0	12	24	36	48
Load Center From Boom Face (in)	8	70900	78000	85000	92100	99100
	16	63200	69600	75900	82200	88600
	24	57000	62800	68500	74300	80000
	32	51800	57100	62400	67600	72900
	40	47500	52300	57200	62000	66900
	48	43800	48300	52800	57200	61700
	56	40500	44700	48900	53100	57300
	64	37700	41700	45600	49500	53400
	72	35400	39100	42800	46400	50100
	80	33300	36800	40200	43700	47200
	88	31400	34700	38000	41300	44600
	96	29700	32900	36000	39100	42200
	102	28600	31600	34600	37600	40600
	112	26800	29700	32500	35400	38200
	120	25600	28300	31000	33700	36400

		Lift Capacities w/Forks & Boom (lbs)				
		Counter Weight Extension (in)				
		0	12	24	36	48
Load Center From Boom Face (in)	12	62800	69500	76200	82800	89500
	24	54000	59800	65500	71300	77000
	36	47400	52500	57500	62600	67600
	48	42300	46700	51200	55700	60200
	60	38100	42100	46200	50200	54300
	72	34700	38400	42100	45700	49400

****All Load Capacities are Rated with the Mast Vertical*

85/115 Versa-Lift with 7 Counterweight Slabs

Slab Weight (lbs)	*Number of Slabs*	*Standard Wheel Base*
4700	**7**	**126**

		Lift Capacities w/Forks Only (lbs)				
		Counter Weight Extension (in)				
		0	12	24	36	48
Load Center From Fork Face (in)	24	87100	95400	103700	112000	120300
	36	73500	80500	87500	94500	101500
	48	63600	69700	75700	81800	87900
	60	56100	61400	66700	72100	77400
	72	50100	54900	59600	64400	69200
	84	45300	49600	53900	58200	62600

		Lift Capacities w/Boom Only (lbs)				
		Counter Weight Extension (in)				
		0	12	24	36	48
Load Center From Boom Face (in)	8	77700	85400	93100	100800	108500
	16	69300	76200	83100	90100	97000
	24	62500	68800	75100	81300	87600
	32	56900	62600	68400	74100	79800
	40	52100	57400	62700	68000	73300
	48	48100	53000	57900	62800	67700
	56	44600	49100	53700	58300	62800
	64	41500	45800	50100	54300	58600
	72	38900	42900	47000	51000	55000
	80	36600	40400	44200	48000	51800
	88	34600	38200	41800	45400	49000
	96	32700	36100	39600	43000	46400
	102	31500	34800	38000	41300	44600
	112	29600	32700	35800	38900	42000
	120	28200	31100	34100	37100	40000

		Lift Capacities w/Forks & Boom (lbs)				
		Counter Weight Extension (in)				
		0	12	24	36	48
Load Center From Boom Face (in)	12	69200	76500	83800	91100	98400
	24	59600	65800	72100	78400	84600
	36	52300	57800	63300	68800	74300
	48	46600	51500	56400	61300	66200
	60	42000	46400	50800	55200	59700
	72	38200	42200	46300	50300	54300

****All Load Capacities are Rated with the Mast Vertical*

85/115 Versa-Lift with 8 Counterweight Slabs

Slab Weight (lbs)	*Number of Slabs*	*Standard Wheel Base*
4700	**8**	**126**

		Lift Capacities w/Forks Only (lbs)				
		Counter Weight Extension (in)				
		0	12	24	36	48
Load Center From Fork Face (in)	24	94400	103400	112400	121400	130400
	36	79700	87300	94900	102500	110000
	48	68900	75500	82100	88600	95200
	60	60700	66500	72300	78100	83900
	72	54300	59500	64600	69800	75000
	84	49100	53800	58400	63100	67800

		Lift Capacities w/Boom Only (lbs)				
		Counter Weight Extension (in)				
		0	12	24	36	48
Load Center From Boom Face (in)	8	84400	92800	101100	109500	117800
	16	75400	82900	90400	97900	105400
	24	68000	74800	81600	88400	95200
	32	61900	68100	74400	80600	86800
	40	56800	62500	68200	74000	79700
	48	52400	57700	63000	68300	73600
	56	48600	53500	58500	63400	68400
	64	45300	49900	54500	59200	63800
	72	42500	46800	51200	55500	59900
	80	40000	44100	48200	52300	56400
	88	37700	41600	45500	49400	53300
	96	35700	39400	43100	46800	50500
	102	34400	37900	41500	45100	48600
	112	32300	35600	39000	42400	45700
	120	30800	34000	37200	40400	43600

		Lift Capacities w/Forks & Boom (lbs)				
		Counter Weight Extension (in)				
		0	12	24	36	48
Load Center From Boom Face (in)	12	75600	83500	91400	99300	107200
	24	65100	71900	78700	85400	92200
	36	57100	63100	69000	75000	80900
	48	50900	56200	61500	66800	72100
	60	45900	50700	55400	60200	65000
	72	41800	46100	50500	54800	59200

****All Load Capacities are Rated with the Mast Vertical*

85/115 Versa-Lift with 9 Counterweight Slabs

Slab Weight (lbs)	*Number of Slabs*	*Standard Wheel Base*
4700	**9**	**126**

		Lift Capacities w/Forks Only (lbs)				
		Counter Weight Extension (in)				
		0	12	24	36	48
Load Center From Fork Face (in)	24	101700	111400	121100	130700	140400
	36	85800	94000	102200	110400	118500
	48	74300	81300	88400	95500	102600
	60	65400	71700	77900	84100	90400
	72	58500	64100	69600	75200	80800
	84	52900	57900	62900	68000	73000

		Lift Capacities w/Boom Only (lbs)				
		Counter Weight Extension (in)				
		0	12	24	36	48
Load Center From Boom Face (in)	8	91200	100200	109200	118200	127200
	16	81500	89500	97600	105700	113700
	24	73500	80900	88200	95500	102800
	32	67000	73700	80400	87100	93800
	40	61400	67600	73800	79900	86100
	48	56700	62400	68100	73900	79600
	56	52600	57900	63300	68600	73900
	64	49000	54000	59000	64000	69000
	72	46000	50700	55400	60100	64800
	80	43300	47700	52200	56600	61000
	88	40900	45100	49300	53500	57700
	96	38700	42700	46700	50700	54700
	102	37300	41100	44900	48800	52600
	112	35000	38600	42200	45900	49500
	120	33400	36800	40300	43800	47200

		Lift Capacities w/Forks & Boom (lbs)				
		Counter Weight Extension (in)				
		0	12	24	36	48
Load Center From Boom Face (in)	12	82000	90500	99000	107500	116000
	24	70600	77900	85200	92500	99800
	36	61900	68400	74800	81200	87600
	48	55200	60900	66600	72300	78100
	60	49700	54900	60100	65200	70400
	72	45300	50000	54700	59400	64100

****All Load Capacities are Rated with the Mast Vertical*

(785) 594-7474 • Fax: (785) 594-7475

WEIGHTS AND FLOOR LOADINGS
VERSA-LIFT 85/115 WITH BOOM AND FORKS
(100/140)

FRONT TRACK-	71"
REAR TRACK -	82"
OVERALL WIDTH -	96"
WHEELBASE EXTENDS -	126" TO 174"

WEIGHTS

	NO LOAD	FRAME OUT (115,000# LOAD)	FRAME IN (85,000# LOAD)
WEIGHT ON DRIVE AXLE -	55,600#	221,500#	192,600#
WEIGHT ON STEER AXLE -	64,400#	13,500#	12,400#
TOTAL WEIGHT -	120,000#	235,000#	205,000#

FLOOR LOADING WITH POLY TIRES

	GROUND PRESSURE	FOOTPRINT (per wheel)
FLOOR LOADING - EMPTY	398 psi ON STEER	80.90 square inches each
FLOOR LOADING - LOADED 115,000# AT 36" LOAD CENTER	390 psi ON DRIVE	283.97 square inches each